A3 SHEET

CONCRETE SPECIFICATION

EARTH & SITE WORKS

- Contractor shall remove vegetation / organic matter from site prior to commencement of the concrete works. Top soil and organic matter must not be used as fill material.
- Excavated material that is highly or extremely reactive is not suitable to be used as fill. Fill material should be imported, approved and nonreactive material with a minimum CBR 15. The fill material is to be installed in strict accordance with relevant Australian Standards, compacted in layers of 150mm maximum depth and be of at lease 98% Standard Dry Density. A geotechnical engineer should be engaged to test and ensure nonreactive fill and minimum prescribed Standard Density.
- Where applicable, fill behind brick bases is to be rolled fill in accordance with AS 2870.
- The bearing capacity of founding material is to be not less than 100 kPa unless noted otherwise; bearing capacity must be confirmed on site prior to commencement by a geotechnical engineer.
- Before placing concrete ensure that loose soil, mud or sitting water is removed from the excavated based base.
- Before installing reinforcement, install waterproof membrane universally under the slab, sheets shall be lapped minimum 200mm and taping all penetrations and joints within the film. Membrane to be 0.2mm thick and placed on minimum 50mm maximum 100 mm approved bedding sand.
- The contractor is to ensure that ttermite treatment be carried out in accordance with relevant Australian Standards by a suitably qualified technician.

CONCRETE

- Provide workmanship and materials in accordance with AS 3600, the SAA standards cited within AS 3600, the drawings and specifications.
- Specification and Supply of Concrete to be in accordance with AS 1379.
- Footings shall have a minimum concrete strength of 20 MPa.
- Slabs shall have a minimum concrete strength of 25 MPa.
- Unless noted otherwise slump shall be 80 mm and an aggregate size of 20 mm.
- All concrete shall be cured with an approved method for a minimum of seven days unless noted otherwise.
- Mesh fabric and trench mesh are to comply with AS/NZS 4671.
- Concrete in footings & slab beams shall be mechanically vibrated & reinforcement shall be fixed in position by approved bar chairs (plastic or concrete) or ligatures or both.
- Ensure reinforcement is adequately supported to achieve required cover. Unless noted otherwise chairs shall be installed a minimum of 1000 mm each way. Mesh shall be chaired 600 mm each way.
- Unless noted otherwise on plans, the cover to reinforcement shall be :-
  Foundations 50mm
  Slabs 30mm

DRAINAGE

- Finished slab level shall be a minimum of 225 mm from finished ground level or as specified by Local Authority.
- During construction, run-off must be collected and transported away from the building. Excavations near the edge of footings must be filled in a way that prevents water from penetrating and tracking along excavations; sand or gravel should not be used as backfill material.
- Surface run-off shall drain away from foundations using adequate earthworks falls.
- Services that are parallel to the foundation beams must not be located closer than one meter to the foundation. Where services penetrate foundations they shall be sleeved. Joints in plumbing pipes within 3.0m of the house must be articulated to accommodate ground movements; jointing detail is to be provided by a suitably qualified hydraulic engineer / designer (not by Olivotto Consulting).

NOTES FOR THE BUILDING OWNER

- Olivotto Consulting requests that the building owner reads and adheres to 'Foundation Maintenance and Footing Performance: A Homeowner's Guide' by CSIRO.
- Trees cause damage to buildings and should not be planted closer than 2.5 times their mature hight to the footings/foundations/slabs.
- A moderate degree of shrinkage cracking to the residential slab may occur as the concrete dries out. The relevant Australian Standard allows for these cracks and the slab has been designed so that the structural capacity is not reduced. A flexible adhesive under tile floors and similar rigid finishes is recommended.

NOTE :-
CONTRACTOR TO VERIFY ALL INFORMATION, LEVELS AND DIMENSIONS ON SITE PRIOR TO COMMENCEMENT

NOTE :-
FRAMING PLANS MUST BE PROVIDED TO OLIVOTTO CONSULTING PRIOR TO CONSTRUCTION TO CONFIRM LOAD BEARING WALL LOCATIONS.

NOTE :-
REFER ALSO TO DRAWINGS BY:
STRUXI DESIGN REF 232057 B1 & 232057.S-BE

"C2" WIND CLASSIFICATION HAS BEEN ALLOWED FOR IN DESIGN AS PER AS 1684.3

The builder is to check the location and depths of the sewer main and refer the information to the structural engineer for changes to the footing design prior to works commencing.

NOTE :-
VERIFY LOCATION & DEPTH OF ALL EXISTING IN-GROUND SERVICES PRIOR TO COMMENCEMENT OF CONSTRUCTION

NOTE :-
REFER TO SITE CLASSIFICATION REPORT No. GT23-292-006R REV 1 BY ETS GEOTECHNICAL

NOTE :-
ALL SET-OUT DIMENSIONS, FLOOR LEVELS, SETDOWNS / FALLS ETC. MUST BE VERIFIED ON SITE & WITH ARCHITECTURAL DWGS PRIOR TO COMMENCEMENT OF CONSTRUCTION.

SAFETY IN DESIGN

- Notice to all persons who commissioned the design work depicted in these documents. This notice is also relevant to all those involved in the construction of the works, its operation and demolition.
- The construction of these works involves activities which has some risk to the health and safety of those:
  - involved in the construction, and those who are not involved in the construction but enter the construction site.
  - who use the facility. This facility requires mantenance to maintain its intended level of safety. Note that maintenance activities also carry health and safety risks.
- The eventual demolition of these works will involve activities which has some risk to health and safety.
- Please contact Olivotto Consulting for information and assistance with minimising these risks.

BAKER BUILDING CERTIFICATION | Private Building Certifiers
RESIDENTIAL | COMMERCIAL | INDUSTRIAL | REMOTE
mob: 0448 377 172
phone: 07 4299 3267
web: www.bakerbuildingcert.com.au
address: 5/154 Robert Street, Atherton
postal: PO Box 1083, Tolga 4882

00006982

Clayton Baker

APPROVED in accordance with the Building Act 1975. Refer to the conditions of approval on the Decision Notice. All endorsements made on the plan in RED ink are part of this approval

OLIVOTTO CONSULTING

A.B.N. 85 637 763 896
A.C.N. 637 763 896
PO Box 663, Potts Point NSW 1335
PO Box 7047, Holland Park East QLD 4121
1-152 Palmerin St, Warwick QLD 4370

NORTH PENINSULA REGIONAL COUNCIL
PROPOSED RESIDENCE
LOT 326 SP273361
325 POI POI ST
BAMAGA QLD 4876

Description:	Date:	By:	Rev:
Issue For Approval	23/05/2024	MO	A
Issue For Approval	26/04/2024	MO	P/a

NOTES

Scale: As Shown (Don't Scale DWG)
Certified:
Drawn: BH
Page 1 of 7
Project No.: 23372_BE_B1
Rev: A
No: 1

This drawing is the property and copyright of Olivotto Consulting Pty Ltd.

A3 SHEET

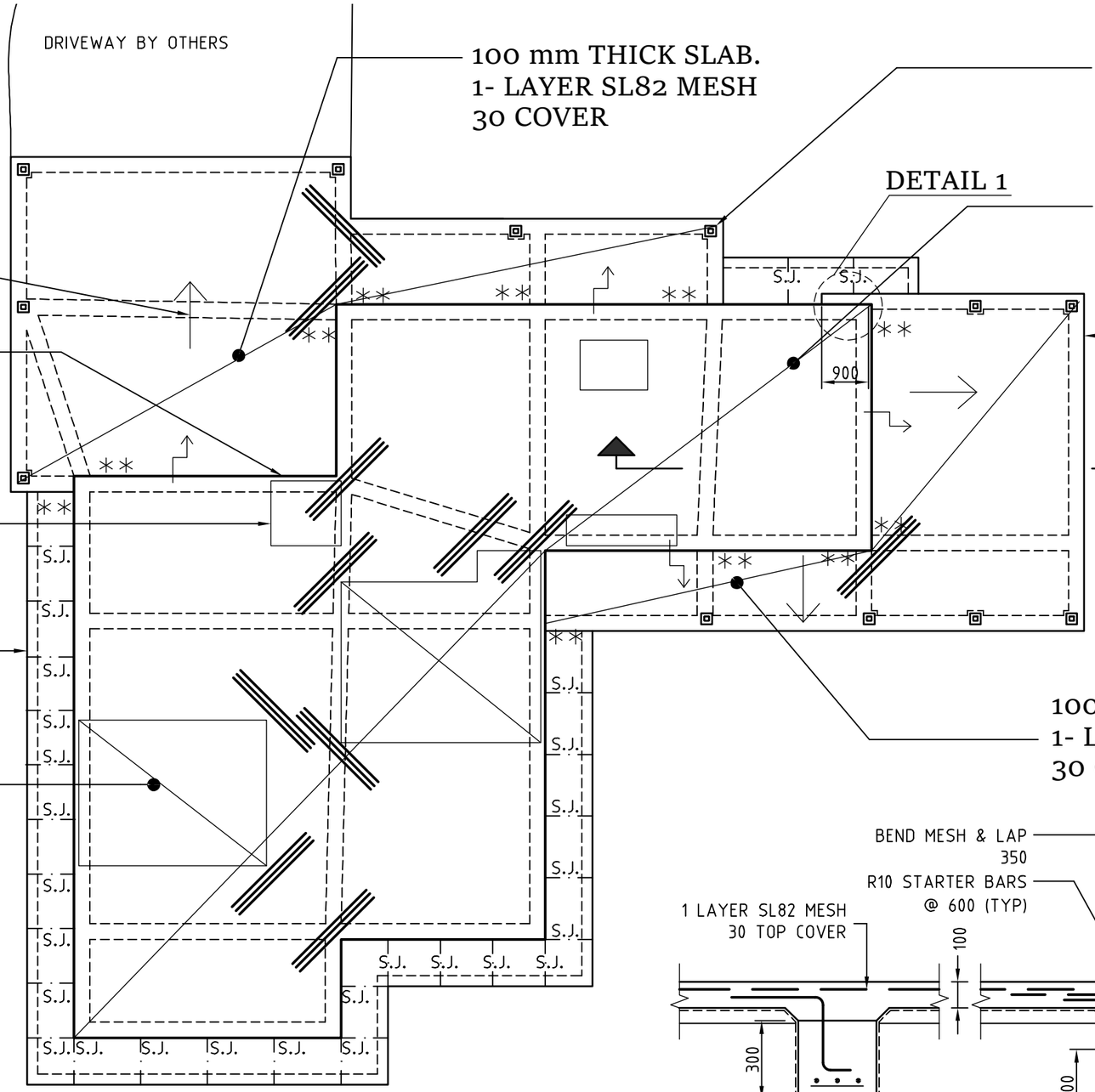

NOTE :-
SETDOWNS & FALLS TO EXTERNAL CONCRETE AREAS NOT INDICATED ON SECTIONS. REFER BUILDING DESIGNERS DRAWINGS SPECIFICATIONS

SLAB & FOUNDATION LAYOUT

SCALE 1 : 100

** ... OUTDOOR AREA FOOTINGS TO BE POURED CONTINUOUS WITH BUILDING FOOTINGS

S.J. ...DENOTES SHRINKAGE JOINT, REFER DETAIL

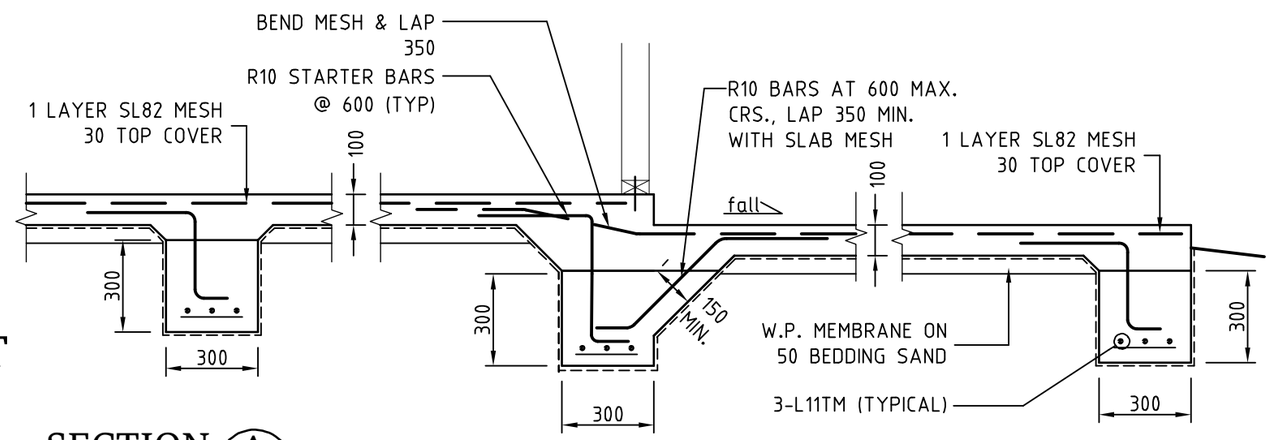

SECTION A --

SCALE 1 : 20

BAKER BUILDING CERTIFICATION
RESIDENTIAL | COMMERCIAL | INDUSTRIAL | REMOTE
Private Building Certifiers
mob: 0448 377 172
phone: 07 4090 3267
web: www.bakerbuildingcert.com.au
address: 5/154 Robert Street, Atherton
postal: PO Box 1083 Tolga 4882

00006982

Clayton Baker

APPROVED in accordance with the Building Act 1975. Refer to the conditions of approval on the Decision Notice. All endorsements made on the plan in RED ink are part of this approval

OLIVOTTO CONSULTING	A.B.N. 85 637 763 896 A.C.N. 637 763 896 PO Box 663, Potts Point NSW 1335 PO Box 7047, Holland Park East QLD 4121 1-152 Palmerin St, Warwick QLD 4370	NORTH PENINSULA REGIONAL COUNCIL PROPOSED RESIDENCE LOT 326 SP273361 325 POI POI ST BAMAGA QLD 4876			SLAB & FOUNDATION LAYOUT
					Scale: As Shown (Don't Scale DWG) — Rev: A
		Issue For Approval	23/05/2024	MO	A — Certified:
		Issue For Approval	26/04/2024	MO	P/a — Drawn: BH — Project No.: 23372_BE_B1 — No: 2
		Description:	Date:	By:	Rev: — Page 2 of 7

This drawing is the property and copyright of Olivotto Consulting Pty Ltd.

A3 SHEET

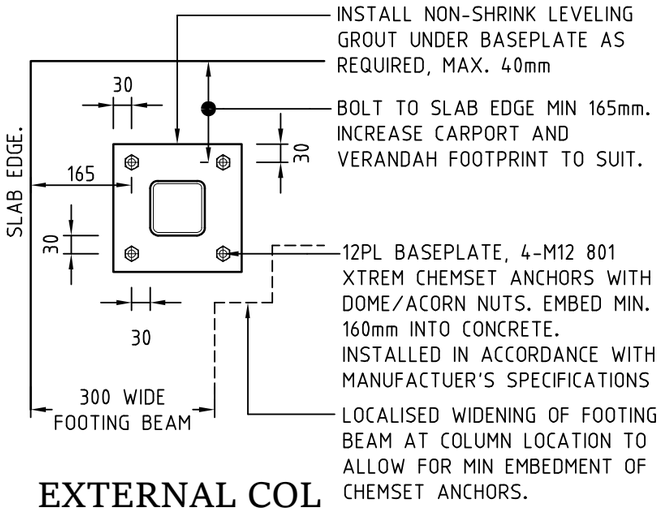

EXTERNAL COL BASEPLATE DETAIL

SCALE 1 : 10

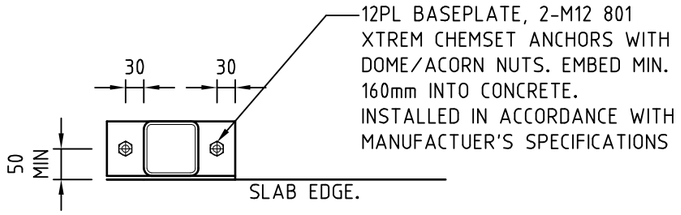

IN-WALL COL BASEPLATE DETAIL

SCALE 1 : 10

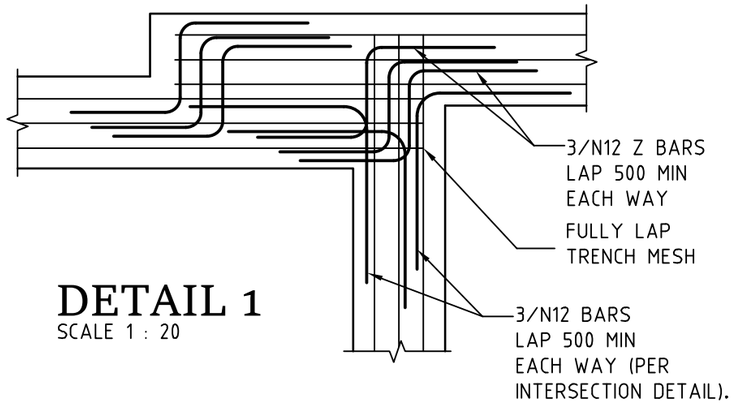

DETAIL 1

SCALE 1 : 20

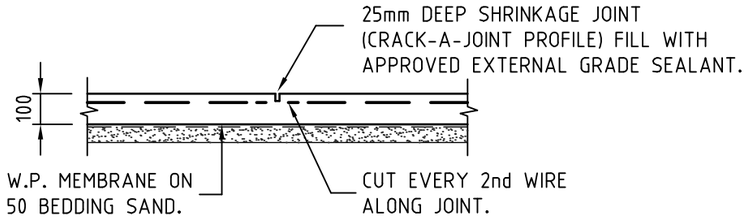

SHRINKAGE JOINT DETAIL. S.J.

SCALE 1 : 20

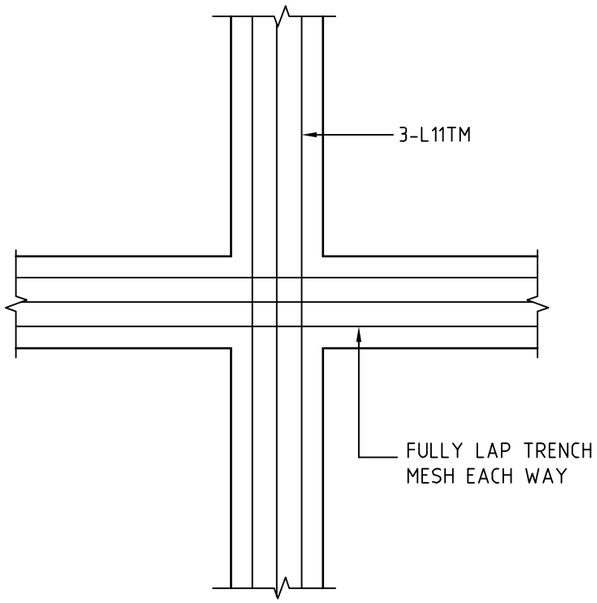

INTERNAL BEAMS INTERSECTION DETAIL

SCALE 1 : 20

BAKER BUILDING CERTIFICATION — Private Building Certifiers
RESIDENTIAL | COMMERCIAL | INDUSTRIAL | REMOTE
mob: 0448 337 172
phone: 07 4091 3267
web: www.bakerbuildingcert.com.au
address: 5/154 Robert Street, Atherton
postal: PO Box 1083, Tolga 4882

00006982

Clayton Baker

APPROVED in accordance with the Building Act 1975. Refer to the conditions of approval on the Decision Notice. All endorsements made on the plan in RED ink are part of this approval

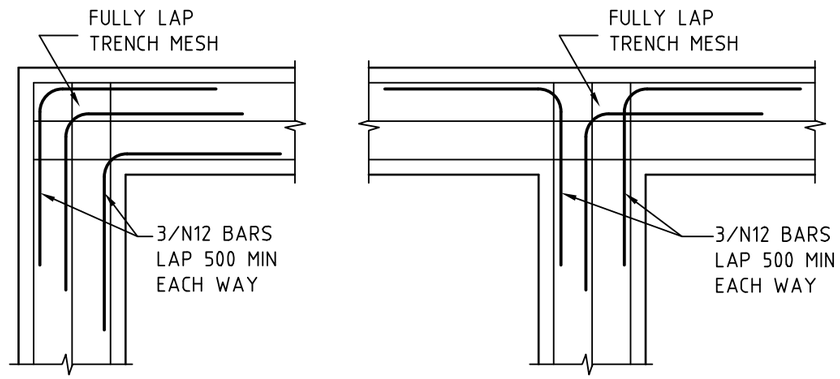

FOOTING CORNER & INTERSECTION DETAIL

SCALE 1 : 20

OLIVOTTO CONSULTING

A.B.N. 85 637 763 896
A.C.N. 637 763 896
PO Box 663, Potts Point NSW 1335
PO Box 7047, Holland Park East QLD 4121
1-152 Palmerin St, Warwick QLD 4370

NORTH PENINSULA REGIONAL COUNCIL
PROPOSED RESIDENCE
LOT 326 SP273361
325 POI POI ST
BAMAGA QLD 4876

Description:	Date:	By:	Rev:
Issue For Approval	23/05/2024	MO	A
Issue For Approval	26/04/2024	MO	P/a

DETAILS 1

Scale: As Shown (Don't Scale DWG)
Rev: A
Certified:
Drawn: BH
Project No.: 23372_BE_B1
Page 3 of 7
No: 3

This drawing is the property and copyright of Olivotto Consulting Pty Ltd.

A3 SHEET

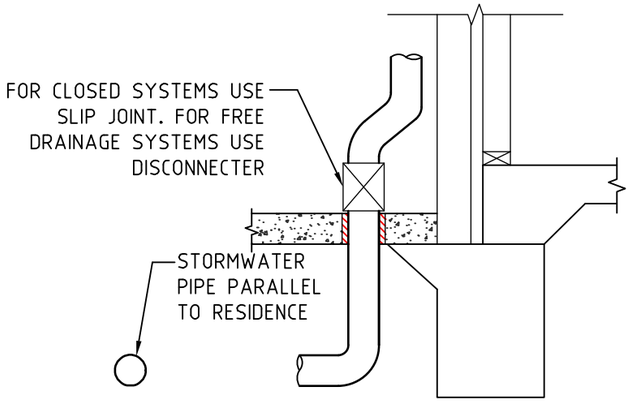

WITH VERANDAH SLAB

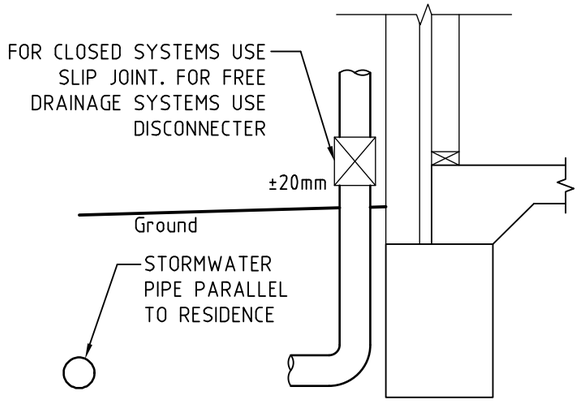

NO VERANDAH SLAB

STORMWATER FLEXIBLE JOINTS DETAIL

SCALE 1:20

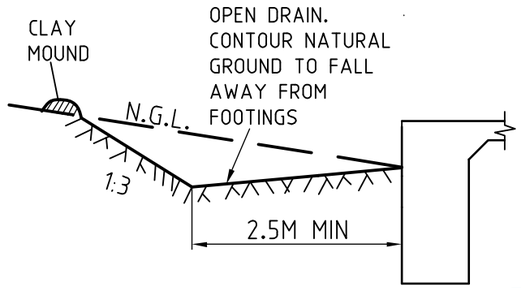

SITE DRAINAGE

BAKER BUILDING CERTIFICATION | Private Building Certifiers
RESIDENTIAL | COMMERCIAL | INDUSTRIAL | REMOTE
mob: 0448 377 172
phone: 07 4090 3267
web: www.bakerbuildingcert.com.au
address: 5/154 Robert Street, Atherton
postal: PO Box 1083 Tolga 4882

00006982

Clayton Baker

APPROVED in accordance with the Building Act 1975. Refer to the conditions of approval on the Decision Notice. All endorsements made on the plan in RED ink are part of this approval

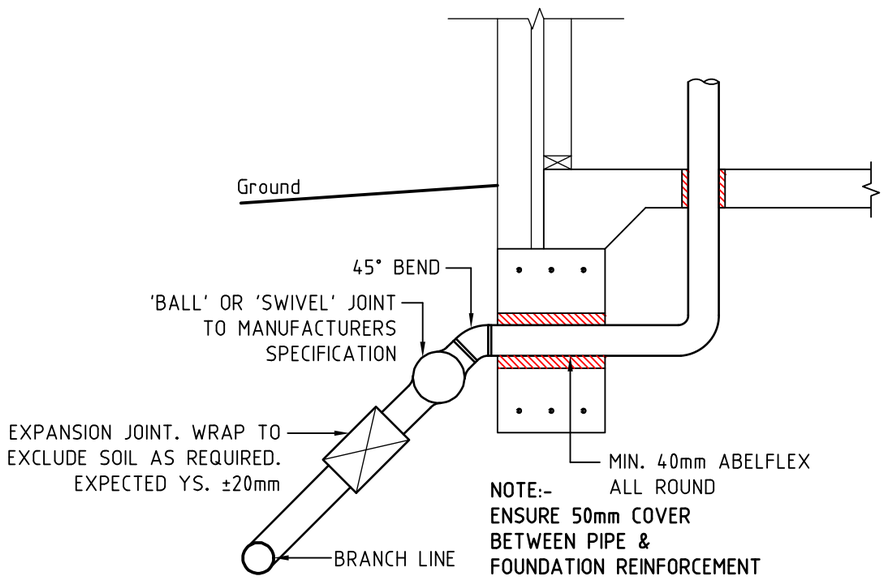

PIPEWORK FLEXIBLE JOINTS DETAIL

SCALE 1:20

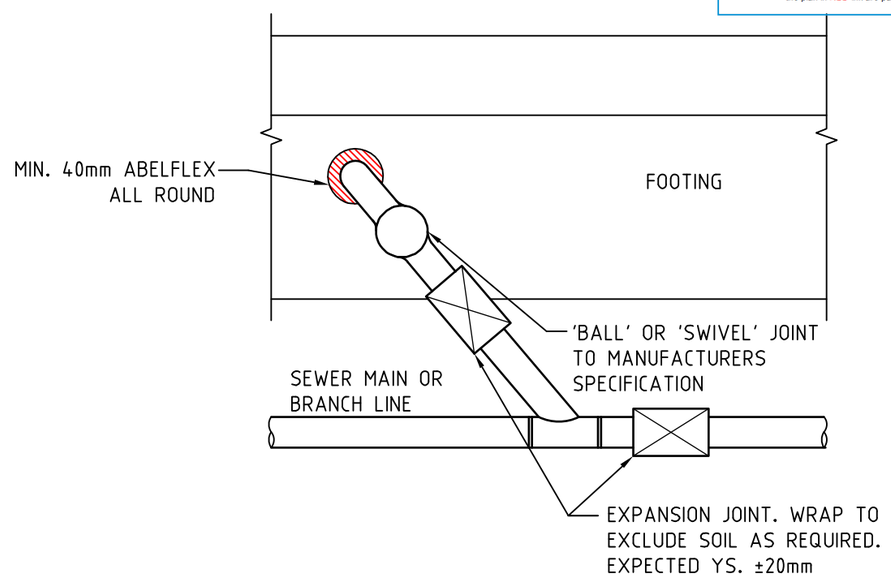

CONNECTION FROM PIPEWORK TO BRANCH LINE DETAIL

SCALE 1:20

OLIVOTTO CONSULTING	A.B.N. 85 637 763 896 A.C.N. 637 763 896 PO Box 663, Potts Point NSW 1335 PO Box 7047, Holland Park East QLD 4121 1-152 Palmerin St, Warwick QLD 4370	NORTH PENINSULA REGIONAL COUNCIL PROPOSED RESIDENCE LOT 326 SP273361 325 POI POI ST BAMAGA QLD 4876					DETAILS 2
						Scale: *As Shown (Don't Scale DWG)*	Rev: A
						Certified:	
		Issue For Approval	23/05/2024	MO	A	Drawn: BH	Project No: 23372_BE_B1
		Issue For Approval	26/04/2024	MO	P/a	Page 4 of 7	No: 4
		Description:	Date:	By:	Rev:		

This drawing is the property and copyright of Olivotto Consulting Pty Ltd.

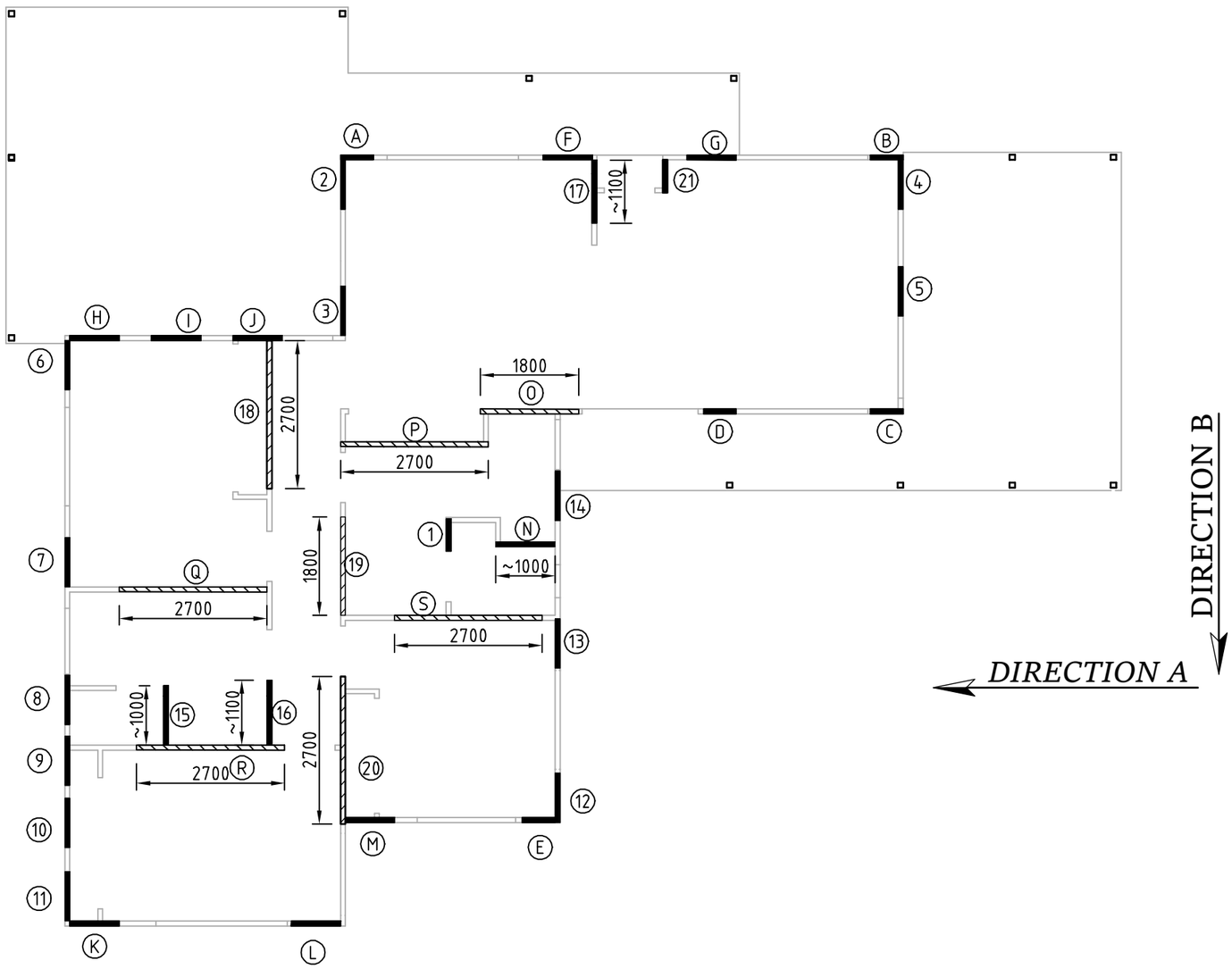

WIND BRACING - C2			
DIRECTION A			
WALL	TYPE	LENGTH (m)	CAP. (kN)
A - E	PLY 8.18(h) Method A 5.6 kN/m	5 @ 0.6m	16.8 kN
F - M	PLY 8.18(h) Method B 5.2 kN/m	8 @ 0.9m	37.44 kN
N	FULL PLY 8.18(h) Method B 5.2 kN/m	1.0m	5.2 kN
O - S	STRAP 8.18(d) Method 3.0 kN/m	12.6m	37.8 kN
		PROVIDED	97.24 kN
		REQUIRED	84.94 kN
DIRECTION B			
WALL	TYPE	LENGTH (m)	CAP. (kN)
1 & 21	PLY 8.18(h) Method A 5.6 kN/m	2 @ 0.6m	6.72 kN
2 - 14	PLY 8.18(h) Method B 5.2 kN/m	13 @ 0.9m	60.84 kN
15 - 17	FULL PLY 8.18(h) Method B 5.2 kN/m	3.2m	16.64 kN
18 - 20	STRAP 8.18(d) Method 3.0 kN/m	7.2m	21.6 kN
		PROVIDED	105.8 kN
		REQUIRED	91.47 kN

PLY BRACING ELEMENTS SHOWN IN
SOLID HATCH, UNO ALL BRACES 0.9m LONG.
WALL BRACING FROM F14 TESTED STRUCTURAL PLYWOOD TO A.S. 2269 PLYWOOD (STRUCTURAL). 4.5MM THICK FASTENED AS PER 1684.2-2021 RESIDENTIAL TIMBER FRAMED CONSTRUCTION, TABLE 8.18 (H) METHOD A & METHOD B, SPECIFICATIONS SO AS TO PROVIDE 5.6KN/M & 5.2KN/M DESIGN RACKING RESISTANCE.
CROSS HATCHED BRACING INDICATES 1.8m LONG UNO STRAP BRACING AS PER AS1684.2-2021 TABLE 8.18 (D) TO PROVIDE 3.0kN/m DESIGN RACKING DISTANCE.

BRACING LAYOUT

SCALE 1 : 100

BAKER BUILDING CERTIFICATION | Private Building Certifiers
RESIDENTIAL | COMMERCIAL | INDUSTRIAL | REMOTE
mob: 0448 377 172
phone: 07 4299 3267
web: www.bakerbuildingcert.com.au
address: 5/154 Robert Street, Atherton
postal: PO Box 1083, Tolga 4882

00006982

Clayton Baker

APPROVED in accordance with the Building Act 1975. Refer to the conditions of approval on the Decision Notice. All endorsements made on the plan in RED ink are part of this approval

OLIVOTTO CONSULTING	A.B.N. 85 637 763 896 A.C.N. 637 763 896 PO Box 663, Potts Point NSW 1335 PO Box 7047, Holland Park East QLD 4121 1-152 Palmerin St, Warwick QLD 4370	NORTH PENINSULA REGIONAL COUNCIL PROPOSED RESIDENCE LOT 326 SP273361 325 POI POI ST BAMAGA QLD 4876				BRACING LAYOUT
						Scale: As Shown (Don't Scale DWG) — Rev: A
						Certified:
		Issue For Approval	23/05/2024	MO	A	Drawn: BH — Project No: 23372_BE_B1 — No: 5
		Issue For Approval	26/04/2024	MO	P/a	
		Description:	Date:	By:	Rev:	Page 5 of 7

This drawing is the property and copyright of Olivotto Consulting Pty Ltd.

A3 SHEET

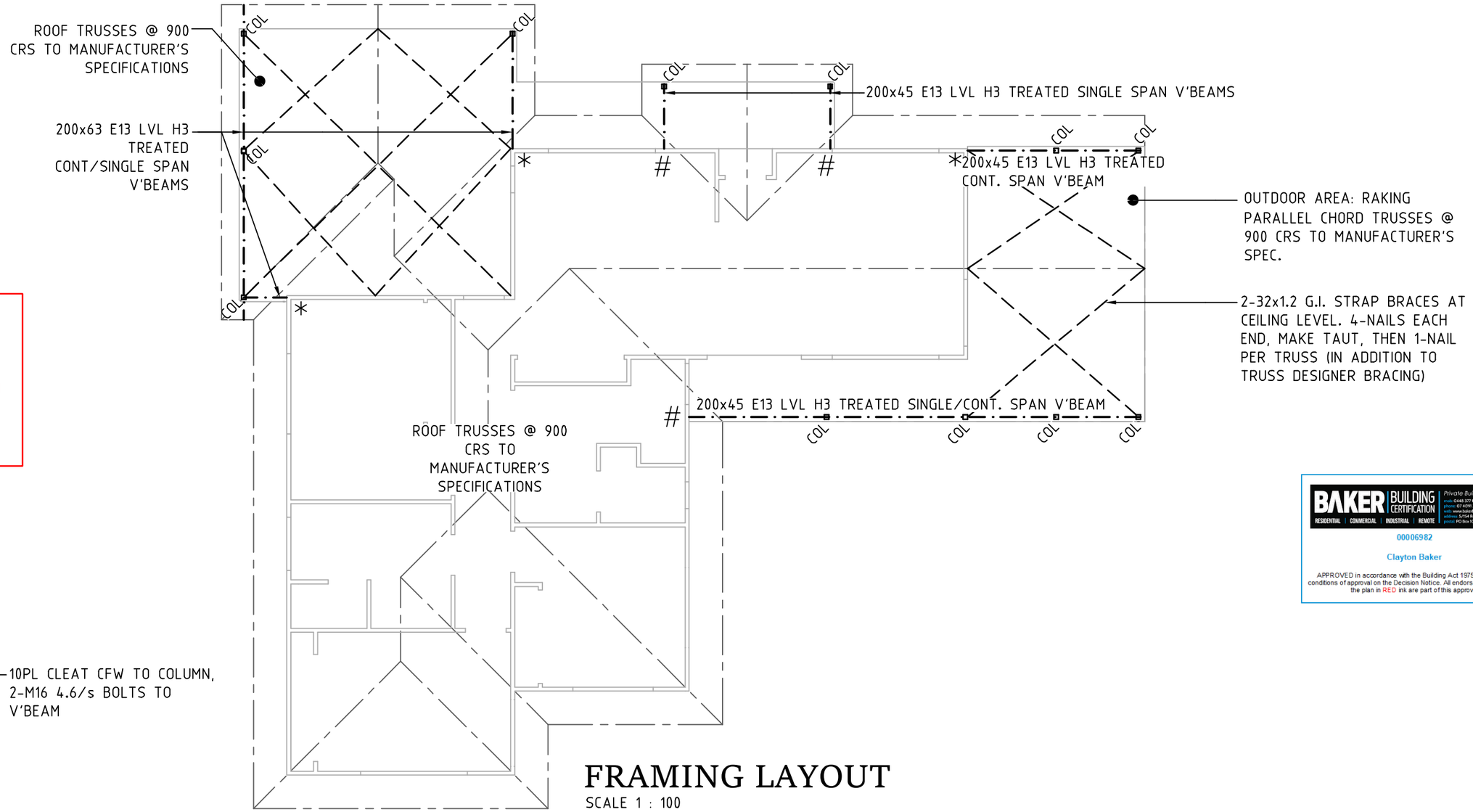

ROOF FRAME MANUFACTURER TO SUPPLY OLIVOTTO CONSULTING WITH TRUSS DESIGN PLANS PRIOR TO COMMENCEMENT OF FOUNDATION WORKS. LOCATION OF LOAD BEARING WALLS MAY IMPACT LOCATION OF THICKENINGS.

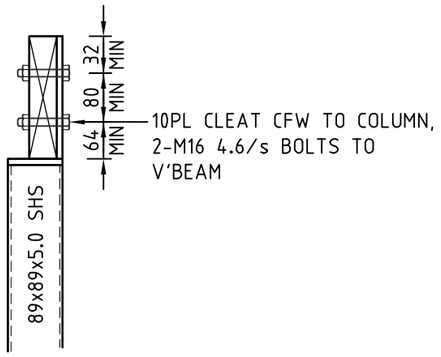

COL TO V'BEAM DETAIL

SCALE 1 : 10

FRAMING LAYOUT

SCALE 1 : 100

* ... DENOTES 3-90x45 MGP12 JAMB STUDS WITH 1-M16 HD BOLT TO SLAB AS PER AS 1684.2 TABLE 9.20

... DENOTES ROOF BEAM LOAD BEARING/HOLD DOWN POINTS AS PER AS1684.2 TABLE 9.20 (f) WITH 4-No. 14 TYPE 17 SCREWS, 6-NAILS PER STRAP & M16 TIEDOWN ROD WITHIN 100mm

COL ... DENOTES 89x89x5.0 SHS COLUMN

BAKER BUILDING CERTIFICATION — Private Building Certifiers — RESIDENTIAL | COMMERCIAL | INDUSTRIAL | REMOTE
mob: 0448 377 172
phone: 07 4299 3267
web: www.bakerbuildingcert.com.au
address: 5/154 Robert Street, Atherton
postal: PO Box 1083, Tolga 4882

00006982

Clayton Baker

APPROVED in accordance with the Building Act 1975. Refer to the conditions of approval on the Decision Notice. All endorsements made on the plan in RED ink are part of this approval

OLIVOTTO CONSULTING	A.B.N. 85 637 763 896 A.C.N. 637 763 896 PO Box 663, Potts Point NSW 1335 PO Box 7047, Holland Park East QLD 4121 1-152 Palmerin St, Warwick QLD 4370	NORTH PENINSULA REGIONAL COUNCIL PROPOSED RESIDENCE LOT 326 SP273361 325 POI POI ST BAMAGA QLD 4876				FRAMING LAYOUT
						Scale: As Shown (Don't Scale DWG) — Rev: A
						Certified:
		Issue For Approval	23/05/2024	MO	A	Drawn: BH — Project No.: 23372_BE_B1 — No: 6
		Issue For Approval	26/04/2024	MO	P/a	
		Description:	Date:	By:	Rev:	Page 6 of 7

This drawing is the property and copyright of Olivotto Consulting Pty Ltd.

A3 SHEET

TIMBER SCHEDULE — RLW = 5.27m (WORST CASE)

	MEMBER	SIZE	STRESS	COMMENT	JOINT GRP
LOAD BEARING	Top Plate	4/45 x 90	MGP12	Seasoned Softwood	JD4
	Bottom Plate	35 x 90	MGP12	Seasoned Softwood	JD4
	Wall Studs 450 crs	90 x 35	MGP12	Seasoned Softwood	JD4
NON-LOAD BEARING	Top Plate	35 x 90	MGP10	Seasoned Softwood	JD4
	Bottom Plate	35 x 90	MGP10	Seasoned Softwood	JD4
	Wall Studs 450 crs	90 x 35	MGP10	Seasoned Softwood	JD4
	Battens	TS4055	Continuous. Install to Manufacturer's Spec		

TIEDOWN SCHEDULE — RLW = 5.27m (WORST CASE)

MEMBER	TIE DOWN	PROV'D (kN)	REQ'D (kN)
BATTENS TO TRUSSES/RAFTERS @ 450 CRS.	TO MANUFACTURERS SPECIFICATION	General Edges	1.5 3.2
TRUSSES/RAFTERS TO PLATE/BEAM @ 900crs.	2/30 x 0.8mm G.I. Looped Straps 4/2.8Ø Nails Each end. 9.21 (e)	25	15.5
TOP PLATE TO SLAB @ 1350crs	1/M16 Tie-down bolt, ends of walls & edges of openings 9.19 (g)	35	21
V'BEAM TO POST	AS PER DETAIL		
COLUMN TO SLAB	AS PER DETAIL		

LINTELS AS1684 9.20(d) OR 9.20(e) — RLW = 5.27m (WORST CASE)

OPENING	MIN. LINTEL	JAMB STUD	HD BOLTS EA SIDE
600	140x35 MGP12	2/90 x 35	M10
900	190x35 MGP12	2/90 x 35	M10
1200	2/140x35 MGP12	2/90 x 35	M10
1500	2/140x35 MGP12	3/90 x 35	M12
1800	2/190x35 MGP12	3/90 x 35	M12
2100	200x45 E13 LVL	3/90 x 35	M16

ROOF LOAD WIDTH (RLW) TO BE CONFIRMED WITH OLIVOTTO CONSULTING ONCE ROOF FRAMING PLANS RECEIVED AND REVIEWED. RLW MAY EXCEED THAT SHOWN.

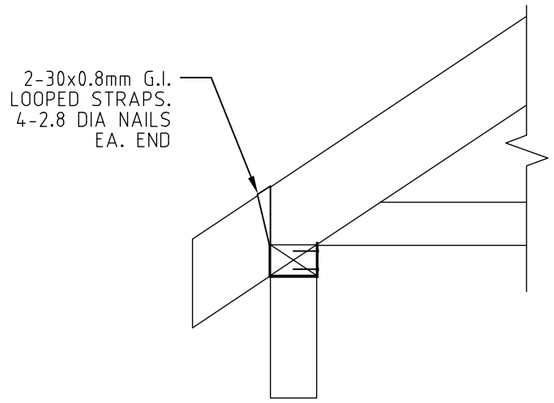

TABLE 9.21 (e)
SCALE 1 : 10
AS1684.2

BAKER BUILDING CERTIFICATION — Private Building Certifiers — RESIDENTIAL | COMMERCIAL | INDUSTRIAL | REMOTE
mob: 0448 377 172
phone: 07 4090 3267
web: www.bakerbuildingcert.com.au
address: 5/154 Robert Street, Atherton
postal: PO Box 1083 Tolga 4882
00006982
Clayton Baker
APPROVED in accordance with the Building Act 1975. Refer to the conditions of approval on the Decision Notice. All endorsements made on the plan in RED ink are part of this approval

OLIVOTTO CONSULTING

A.B.N. 85 637 763 896
A.C.N. 637 763 896
PO Box 663, Potts Point NSW 1335
PO Box 7047, Holland Park East QLD 4121
1-152 Palmerin St, Warwick QLD 4370

NORTH PENINSULA REGIONAL COUNCIL
PROPOSED RESIDENCE
LOT 326 SP273361
325 POI POI ST
BAMAGA QLD 4876

Description:	Date:	By:	Rev:
Issue For Approval	23/05/2024	MO	A
Issue For Approval	26/04/2024	MO	P/a

SCHEDULES
Scale: As Shown (Don't Scale DWG)
Rev: A
Certified:
Drawn: BH
Project No: 23372_BE_B1
Page 7 of 7
No: 7

This drawing is the property and copyright of Olivotto Consulting Pty Ltd.